DIGITAL INDUSTRIES SOFTWARE

Digitalize part manufacturing with NX CAM

Achieve high-performance production

swooshtech.com/siemens-nx-cam-software

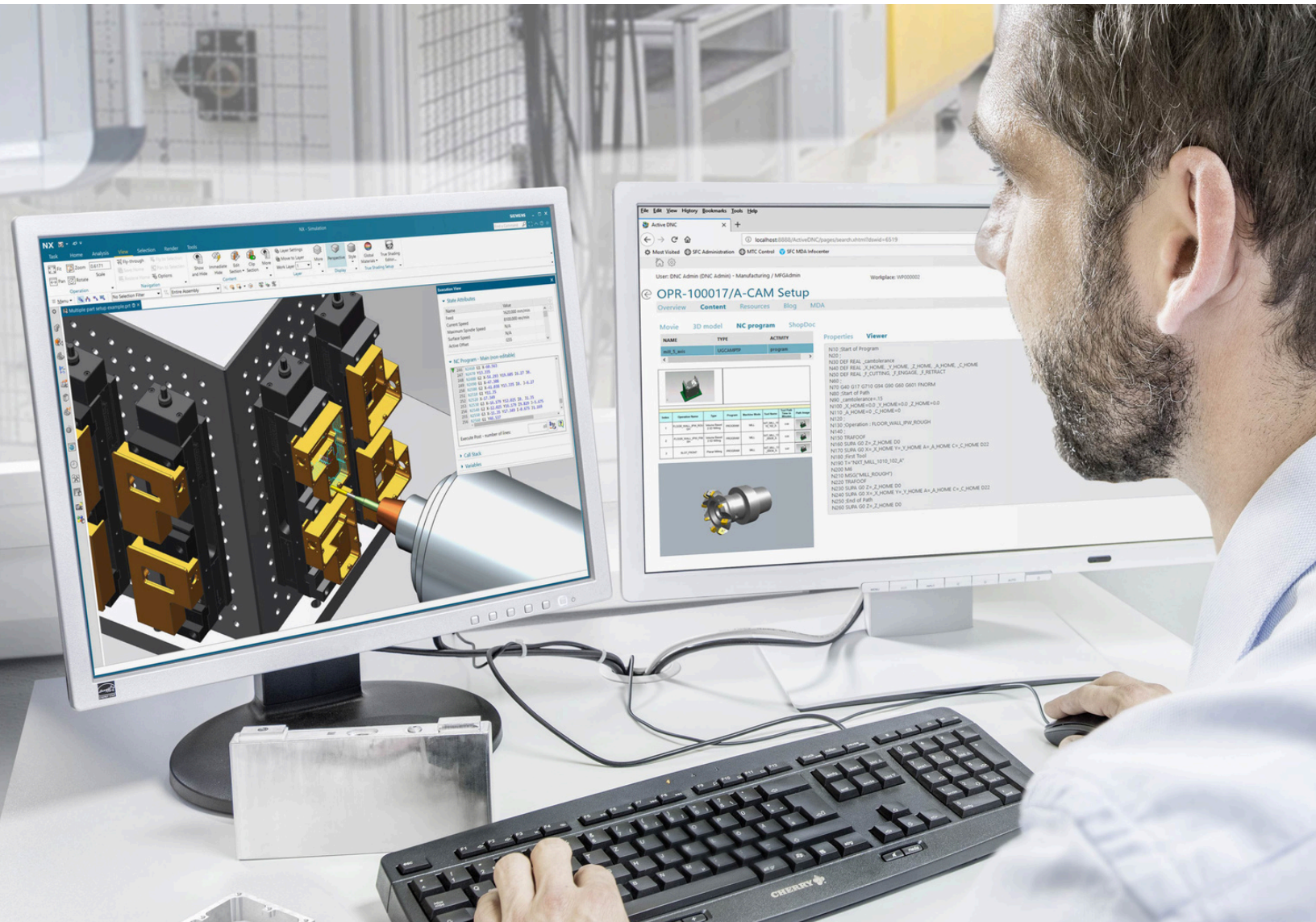

The NX CAM advantage

How does NX™ software help you make better parts faster? What NX advantages make part manufacturing more productive?

More value in each key capability

NX CAM delivers real differences through key capabilities such as its advanced programming, postprocessing and simulation functionality. Each NX module provides more than the standard functions you expect from typical CAM packages. For example, the integrated machine tool simulation is driven by output from the NX postprocessor rather than just tool path data. As a result, NX provides higher-accuracy machining validation right inside its CAM system.

NX for manufacturing

NX provides a complete set of NC programming capabilities in a single CAM system as well as an integrated set of manufacturing software applications. These applications facilitate part modeling, tool design and inspection programming – all based on proven NX technology.

Right for your industry

NX has been adopted across many industries, delivering proven capability for manufacturing in the aerospace, automotive, medical device, mold and die and machinery industries.

Whether you have a small machine shop with a few machine tools or a large team of manufacturing engineers who utilize numerous machine tools, NX provides a solution to match your business needs.

A leader in manufacturing

When the right design and manufacturing software is matched with the latest controllers, machine tools and other shop floor equipment, you can implement a process chain that delivers maximum performance for your business.

Siemens is an established leader in advanced machine tool controller technology and drive equipment. This combination of software and manufacturing equipment expertise enables us to develop part manufacturing solutions that provide you with unique and powerful advantages.

NX CAM is part of the Siemens Xcelerator™ portfolio of integrated solutions and services from Siemens Digital Industries Software.

Key capabilities in NX CAM

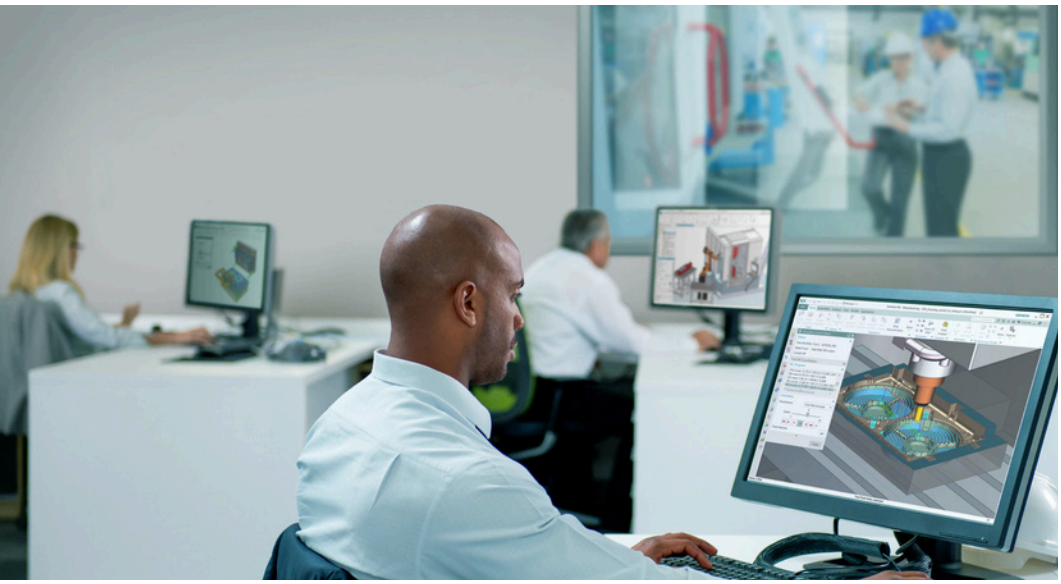

Complete the design-to-manufacturing process chain with NX

Advanced programming capabilities

NX CAM provides a wide range of functionality, from simple NC programming to multi-axis machining, enabling engineers to address many tasks using one system.
The flexibility of NX CAM means that the most demanding jobs can be completed easily.

Programming automation

Advanced feature-based machining provides extra value in programming automation.
With feature-based machining pro-gramming time can be reduced by as much as 90 percent.

Postprocessing and simulation

NX CAM has a tightly integrated post-processing system. Multiple levels of NC program validation include G-code-driven simulation, which eliminates the need for separate simulation packages.

Ease of use

For maximum productivity, users can work on the system graphically. For example, selecting and moving the 3D model of the tool to adjust a tool path is a fast and intuitive way to drive the system.
The dialog boxes use graphics with clear annotation to indicate what values are required for menu input.

Integrated solution

NX provides advanced CAD tools that can be used by the NC programmer for everything from modeling new parts to creating setup drawings directly from 3D model data.
For manufacturing, NX offers special applications alongside CAM, including tool design and inspection programming modules. The 3D model moves seamlessly between applications without data translation.
Connecting NX to Teamcenter® software for data and process management establishes a basis for an extended part manufacturing solution. All types of data from 3D part models to setup sheets, tool lists and CNC output files can be fully managed.

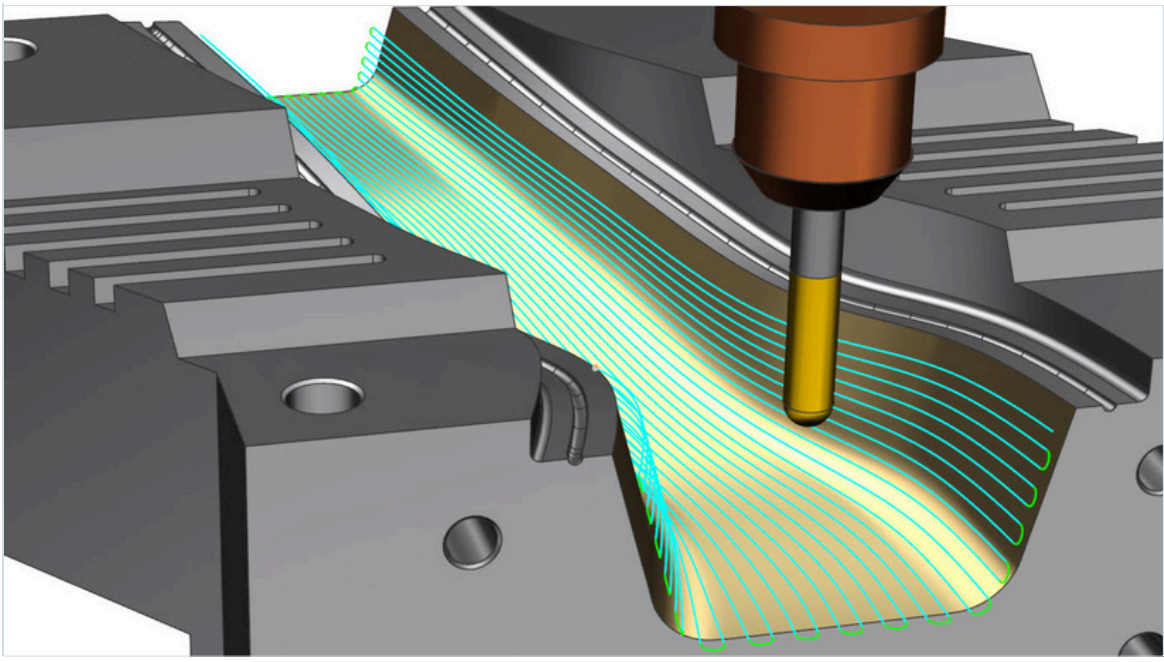

Advanced programming capabilities

Fixed-axis milling

NX CAM provides a wide range of 2.5-axis and 3-axis machining capabilities for prismatic and freeform parts – ranging from core milling to advanced, automated programming methods.

- Volume-based milling automates programming of prismatic parts
- Fully automated rest milling removes uncut material from previous operations and eliminates air cutting
- Multiple part programming speeds up the programming of setups with multiple workpieces, like tombstone configurations
- Automatic collision detection ensures safe machining of the most demanding geometry

High-speed machining (HSM)

Adaptive milling, a high-speed roughing strategy in NX, enables high metal removal rates while maintaining consistent tool load. HSM finishing operations generate smooth-flowing cutting patterns that result in fine finishes at high feed rates.

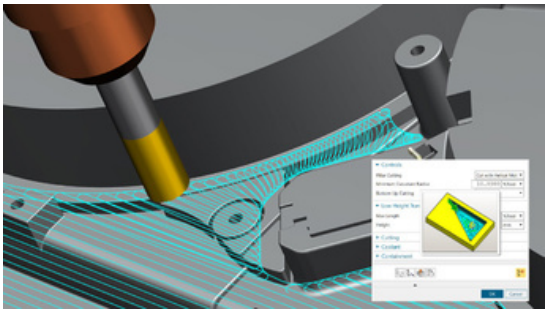

Adaptive milling's smooth patterns enable deep cuts at high machining speeds while managing the tool load, which accelerates machining and extends tool life.

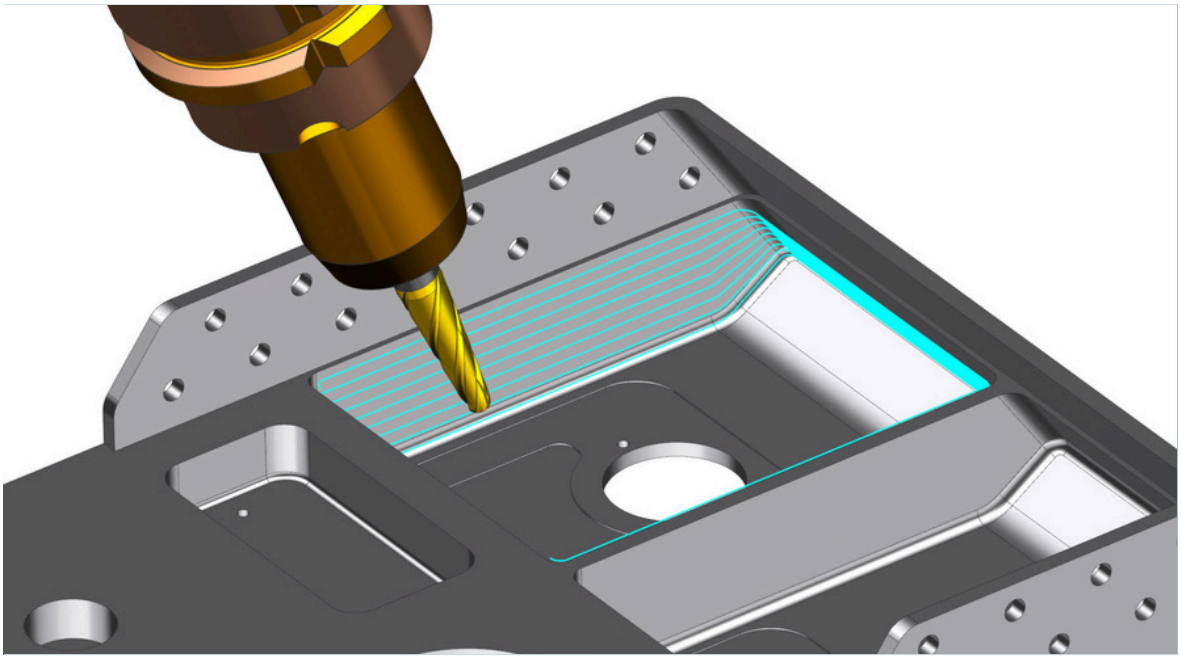

Industry leader in advanced NC programming

5-axis machining

Multiple-axis machining in NX enables you to manufacture complex parts with fewer operations and setups – reducing cost and delivery times.

NX CAM supports a range of methods for defining precisely controlled multi-axis tool paths on complex surfaces, with effective collision and gouge checking.

- 5-axis high-speed roughing enables you to machine parts closer to the final shape, reducing the number of setups and operations.
- Automated tool tilting converts 3- to 5-axis operations to machine parts with deep regions such as molds, using short tools at high feed rates.
- Smooth flowing guiding curves strategy is an ideal cutting method for multi-axis HSM finishing.
- Curvature matching technology with a continuously adjusted tool axis maximizes tool contact to facilitate fewer passes with larger tools.
- Automatic variable-axis profiling requires only minimum geometry selection to cut along drafted walls and other profiles.

Robotic machining

Advanced robotics helps you expand automation and improve productivity on the shop floor. NX lets you program and simulate robots to perform precise CNC machining and pick-and-place operations.

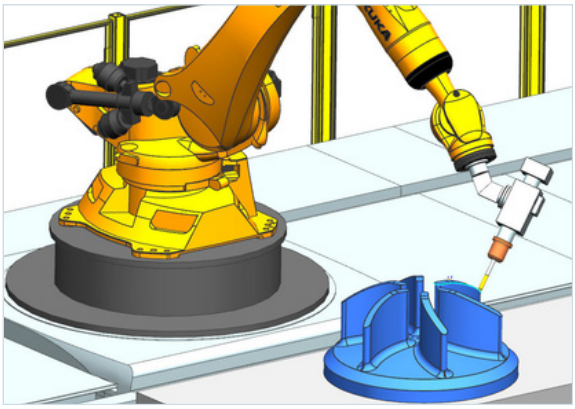

Program robots to machine large parts and to automate machining tasks typically performed manually, such as polishing, trimming and deburring.

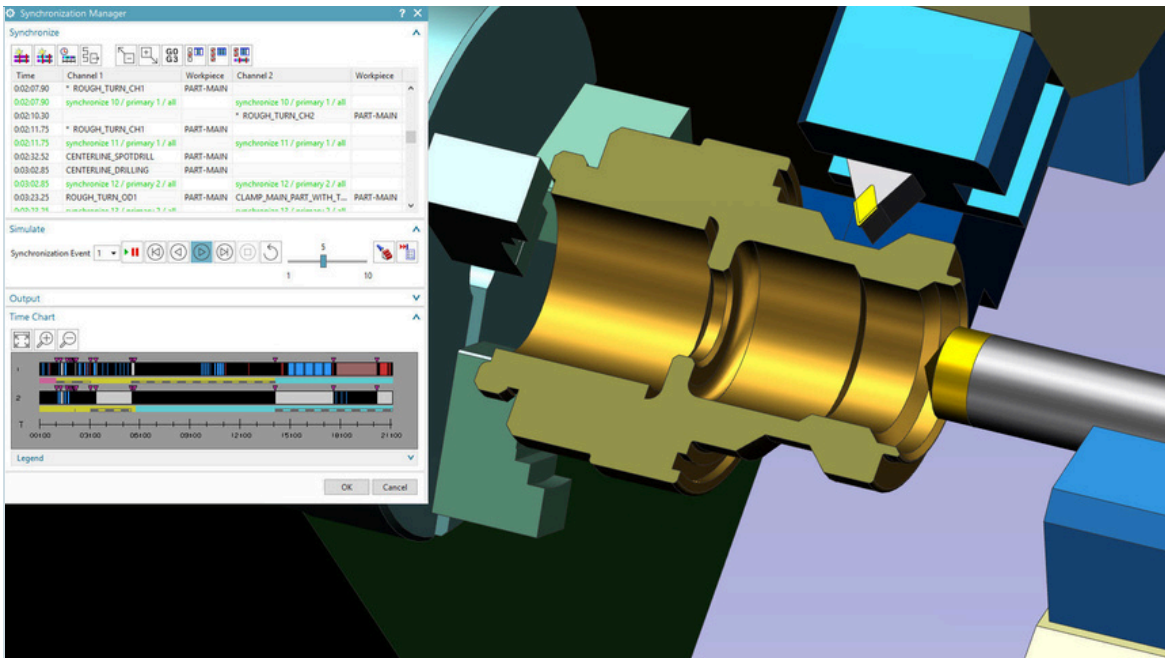

Advanced programming capabilities

Multi-function machines

NX offers a complete range of machining capabilities for the latest multi-function machines that support simultaneous multi- axis operations.

Using a graphical display, the synchronization manager provides interactive control for machining sequences across multiple channels.

Keeping track of the in-process state of the workpiece is a critical component of effective mill-turning. NX CAM automatically generates an in-process workpiece (IPW) to provide seamless transfer of workpiece configurations between milling and turning.

Wire EDM

NX's feature-based machining automates programming, generating a wide-range of 2- and 4-axis operations. The direct access to machine tool technology databases accelerates creation of advanced cutting strategies, such as collar machining, no-core pocketing and multi-pass profiling.

Turning

NX CAM provides a complete turning solution that is easy enough to use on simple programs and capable enough to tackle your toughest geometry in multi-spindle, multi-turret applications. You use either 2D part profiles or full solid models to program roughing, multiple-pass finishing, grooving, thread cutting and centerline drilling operations.

NX turning enables A-axis and B-axis tool control. In addition to rich functionality for common tasks, a special "teach mode" capability provides extra user control for fine finishing and special cutting situations.

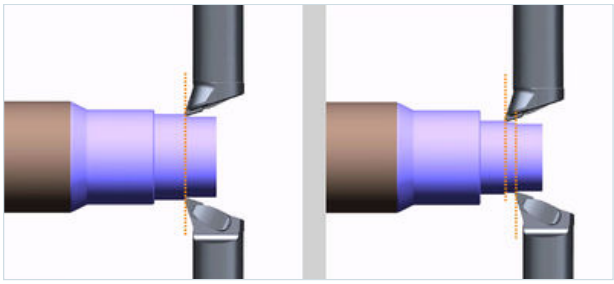

Pinch turning enables simultaneous machining by two opposing tools. The balanced cutting forces minimize parts deflection, allowing deeper cuts and faster machining. Available cutting modes shown:
– Balanced: the opposing tools are aligned (left)
– Merged: one of the tools trails the opposing tool (right)

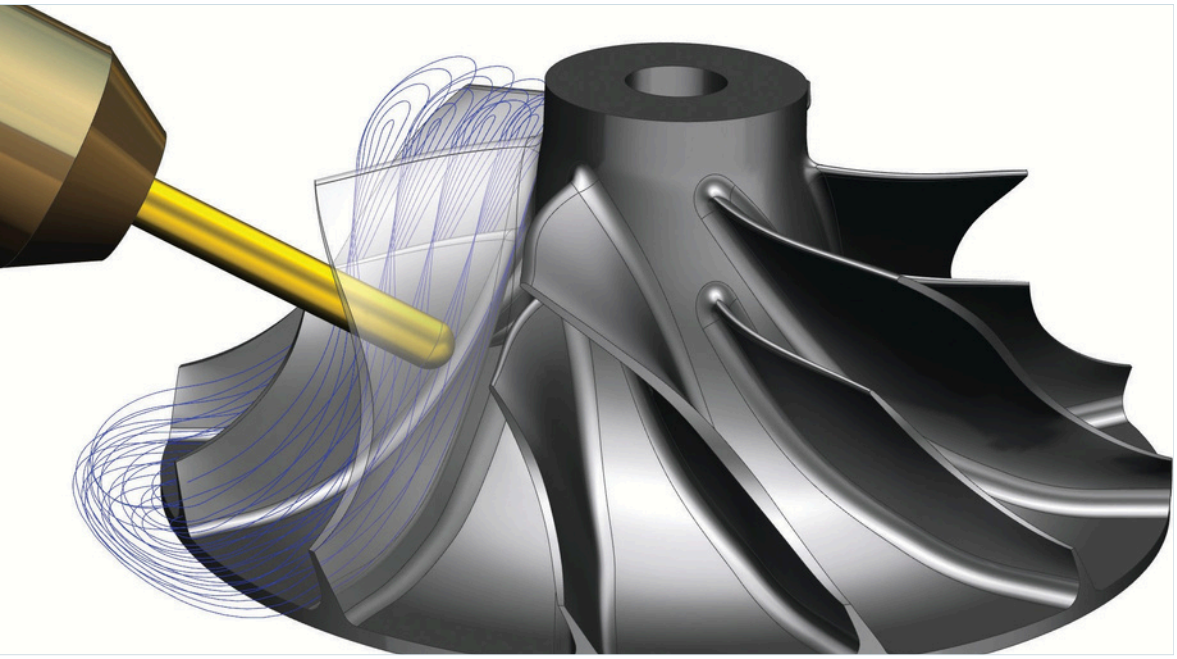

NX Turbomachinery Milling for easy programming of multi-bladed parts

Application-specific programming

Application-specific software significantly improves the productivity of the NC programmer compared to the use of generic functions.

Turbomachinery milling

With NX, you can reduce programming effort by applying specialized 5-axis NC programming operations for complex multi-bladed rotational parts, such as blisks and impellers.

Simultaneous 5-axis roughing and rest milling enable you to efficiently remove material between the blades by specifying parameters, such as cut level offsets, drive pattern and tool axis.

Hub finishing creates an optimized tool path by precisely controlling the side stepover, cut pattern and tool path smoothing.

Blade and splitter finishing enables high- er-quality surface finish by using smooth cutting patterns (e.g. spiral and swarf opera- tions) with tool axis stabilization parameters for the edges.

Tube machining

The specialized roughing and finishing operations simplify the programming of hard-to-reach inner surfaces. You can quickly generate smooth, efficient and collision-free tool paths with minimum input.

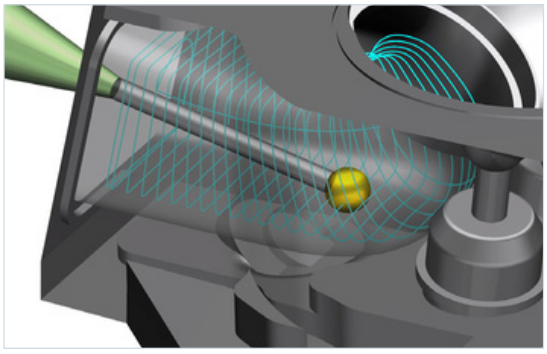

Tube machining streamlines programming of complex hollow regions typically found in manifolds, cylinder head ports and shrouded impellers.

Ten times faster programming

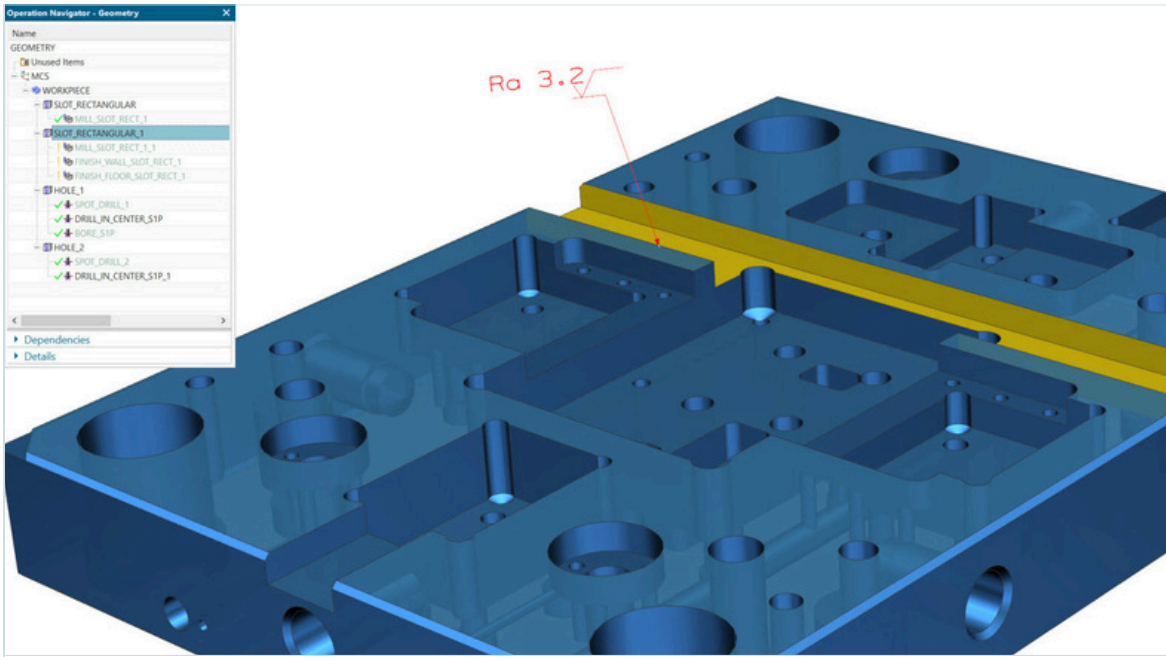

Programming automation

Feature-based machining (FBM)
You can automatically create optimized machine programs directly from part design models by using feature-based machining in NX. FBM automatically recognizes and programs a wide range of machining feature types including:

- Prismatic
- Turning
- Wire EDM
- Color and attributes

Each machining step is selected using a configurable logic and criteria managed in a machining database provided as a part of the system (as shown below). You can easily configure, add or modify the feature-based machining operations and how they are selected using a simple editor (Machining Knowledge Editor).

PMI-driven machining. NX can read product and manufacturing information (PMI), such as tolerances and surface finish, that is attached to the model and drive the machining method selection.

For example, a tight tolerance might require a specific finishing process and tool. NX CAM can read the tolerance data added to the NX design model and use it to select the correct machining operations. In this way, the PMI data drives the NC programming and machining.

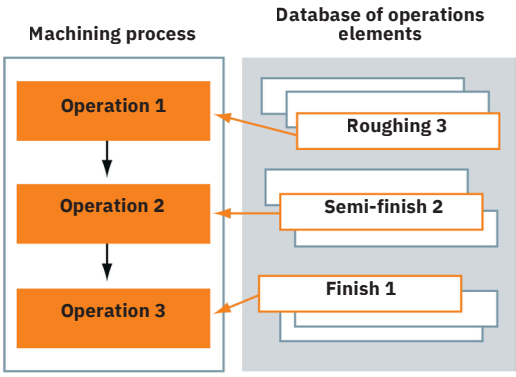

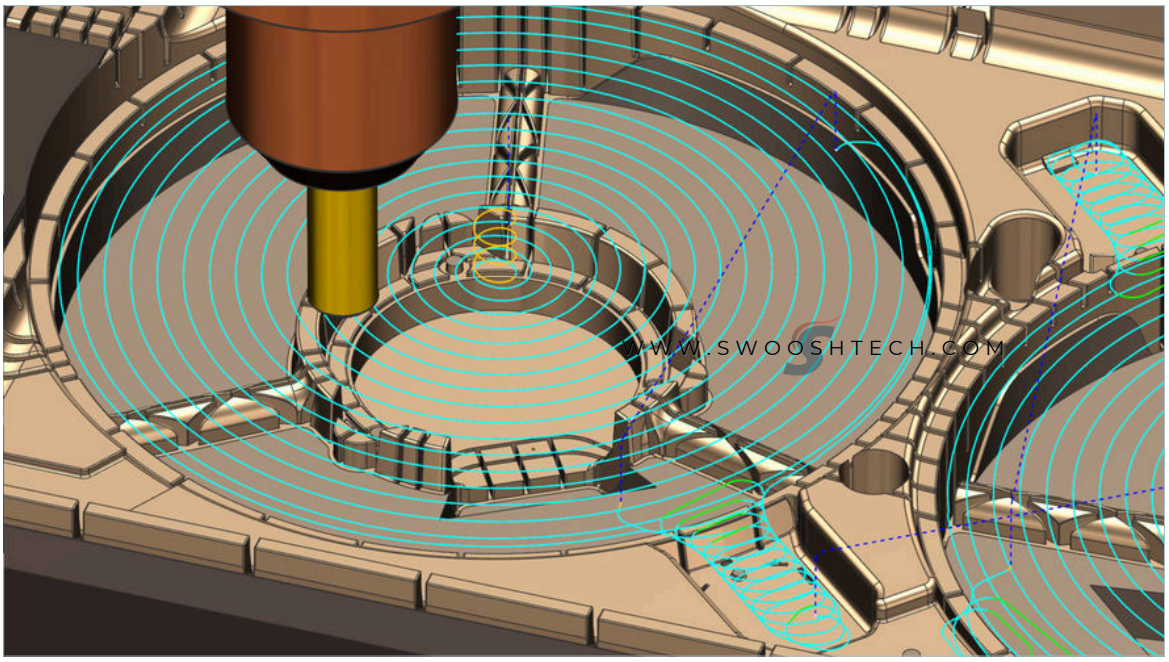

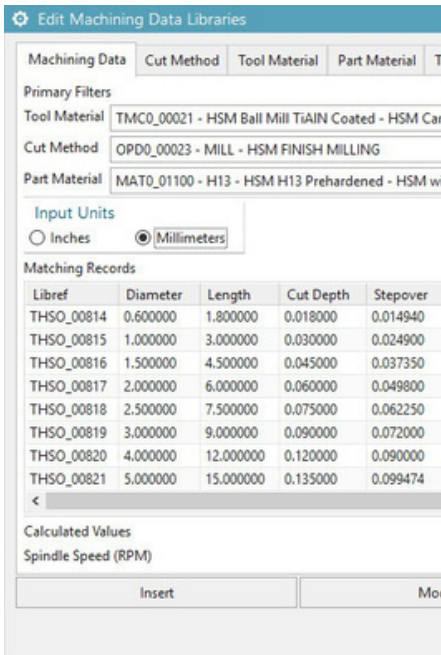

Machining data library

NX CAM provides a customizable machining database that enables you to manage and apply proven data to associative tool path operations.

NX automatically applies the right feeds and speeds for a given operation and tool selection.

Attribute-driven programming

You can automate NC programming in NX by leveraging geometry colors and attributes. This programming method using process templates can significantly reduce programming time, particularly for electrode machining.

Process templates

NX CAM enables you to apply predefined setup templates to standardize and speed the programming task.

Typically, processes are employed to ensure the use of preferred methods and tooling.

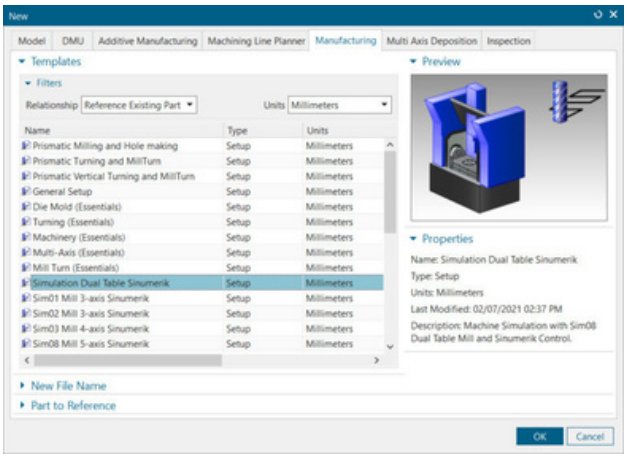

Templates are one of the most powerful ways to standardize NC programming in NX.

Production-ready NC programs for a wide range of machine tools

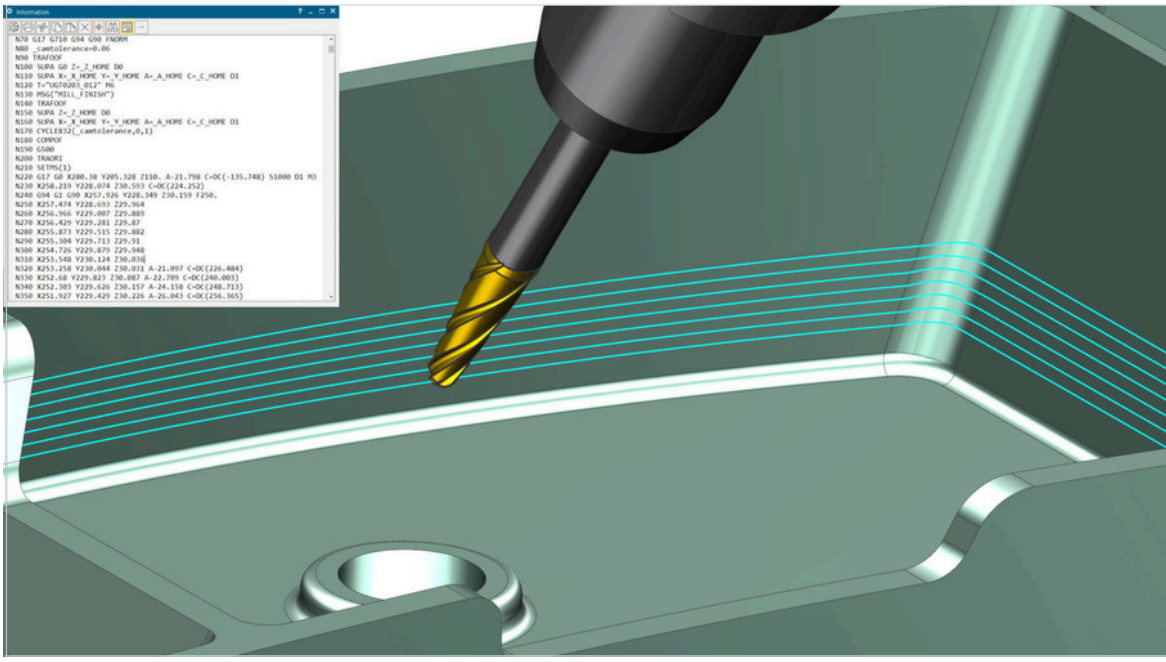

Postprocessing

Integrated postprocessor

NX includes its own postprocessor system, which is tightly connected to the core CAM system.

You can easily generate the required NC code for almost any type of machine tool and controller configuration.

Post Hub

Post Hub is a cloud-based solution for postprocessing using NX CAM. The extensive library of post kits for a wide range of machine tools allows you to quickly output production-ready NC programs.

Post Configurator

NX CAM includes a Post Configurator capability that enables you to create and edit postprocessors. Using its intuitive user interface, you can specify parameters for the required NC codes.

Optimized output for Siemens controllers

NX CAM also provides an optimized Sinumerik postprocessor that automatically selects key controller settings based on machining operation data.

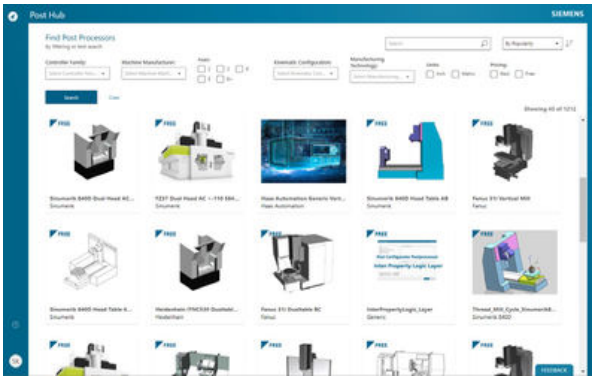

Post Hub, a cloud-based solution for NX CAM postprocessing, provides an extensive library of post kits.

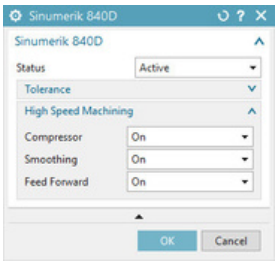

A special menu in NX CAM enables you to select key functions on the Sinumerik controller.

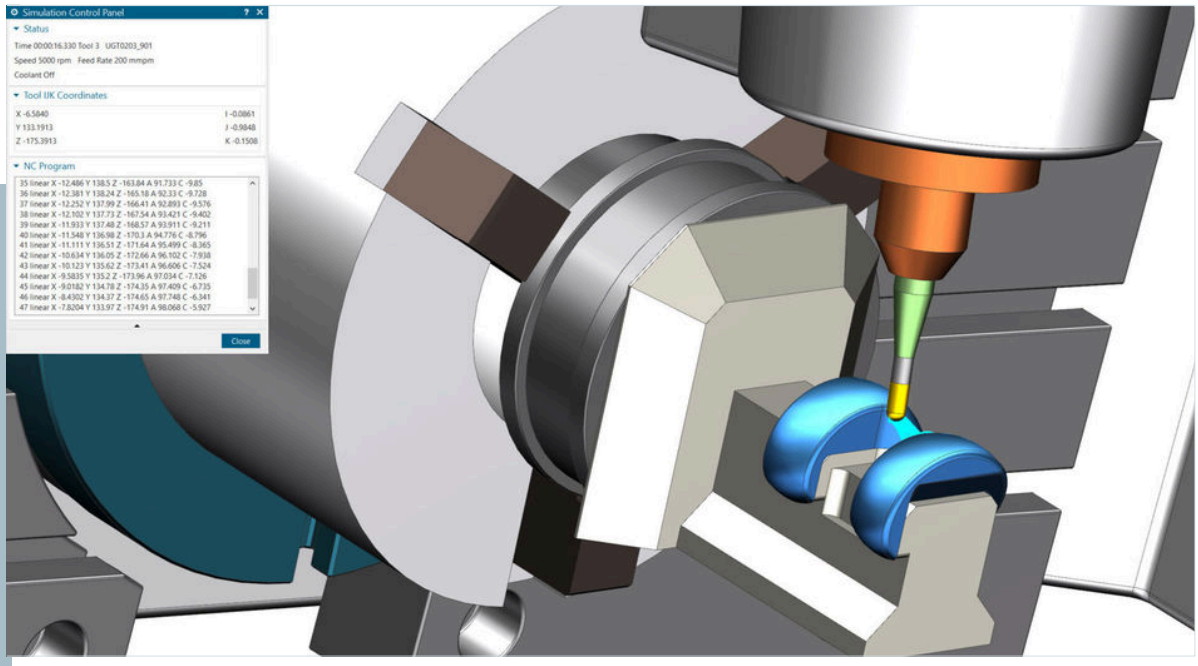

G-code-driven simulation – all in NX

Machining simulation

Machining process validation

A key NX CAM advantage facilitates integrated simulation and verification, which enables programmers to check tool paths within the NC programming session. Multiple levels of capability are available.

For example, the G-code-driven machine tool simulation displays the motion driven from the NC code output of the NX internal post-processor. A 3D model of the machine – with the part, fixtures and tooling – moves in the way the machine tool will move as the G-code is processed.

When the Siemens Virtual NC Controller Kernel (VNCK) is added to NX CAM, real controller software is used to drive your i ntegrated machining simulation solution. The integrated solution facilitates the closest possible digital representation of actual machine tool motion with highly accurate speeds, accelerations, tool changes and cycle times.

Machine tool support kits

For advanced machine tools, support kits provide a complete solution that includes:

- Proven postprocessor
- 3D solid model of the machine tool
- Example parts, templates and documentation

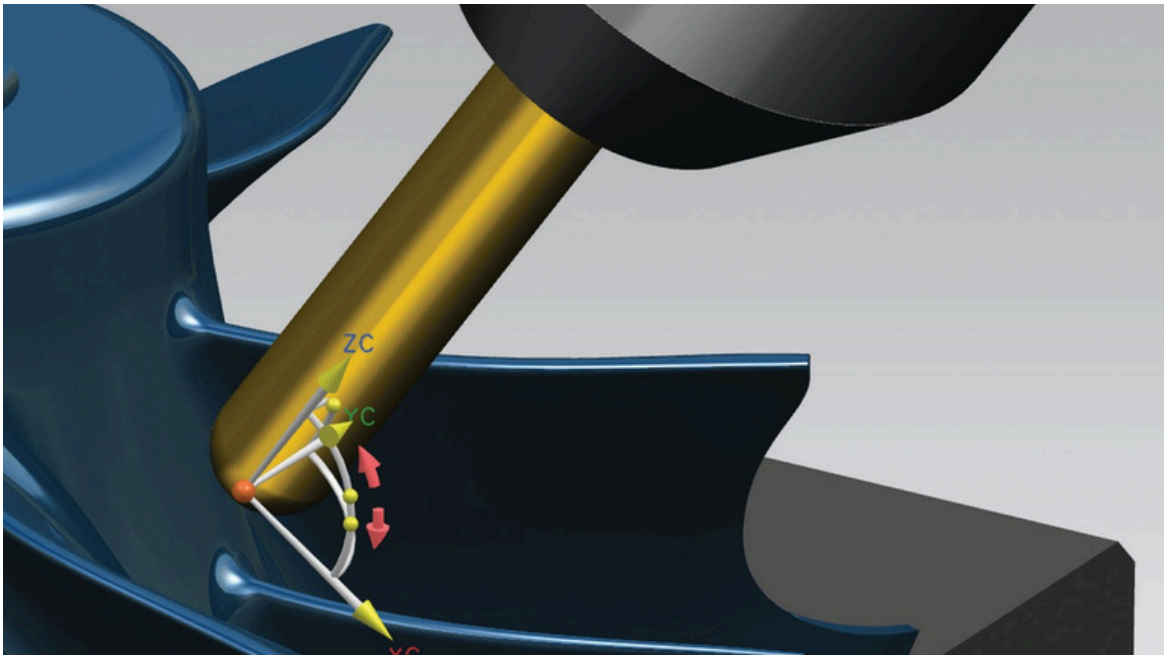

Ease of use

Graphical-driven programming

NX encourages the user to drive the system graphically as much as possible. It is much faster and more intuitive to control a tool by selecting and moving the 3D tool model on the screen than typing numbers into a menu.

Intuitive user interface

You can increase productivity by leveraging the latest user interaction techniques and predefined programming environment.

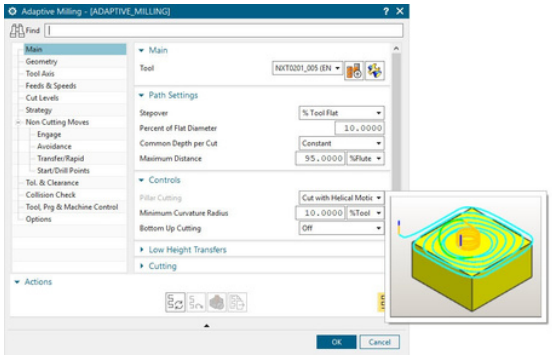

Descriptive images provide visual feedback for dialog options.

Operation navigator

The operation navigator keeps critical information accessible to the programmer and facilitates re-use. A rich information environment displays the operation sequences and dependencies while tracking tool usage and facili- tating associative part data.

Integrated workflow tutorials and documentation

NX provides step-by-step tutorials for various programming processes, including defining machine setup and creating machining operations. These tutorials are accessible from the NX welcome page.

The internet-like search engine in NX enables you to quickly find a command by searching using a keyword.

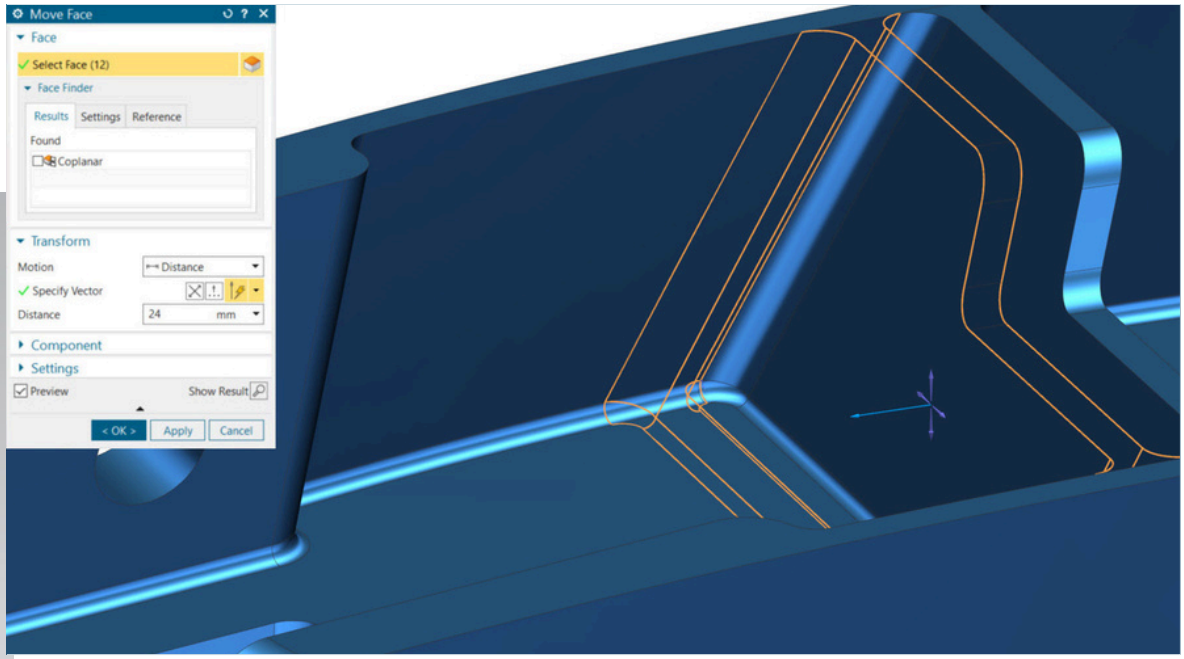

You can easily edit 3D models with a simple drag and drop

The CAD/CAM advantage of NX

3D part model preparation

The latest CAD technology in NX enables the NC programmer to rapidly prepare part models, including third-party CAD models.

With *synchronous technology,* you can directly edit the part model and prepare it for NC programming, including closing holes and gaps, offsetting faces and resizing part features. NX offers a set of specialized CAD functions that enables the NC programmer to quickly analyze the part before creating the NC operations.

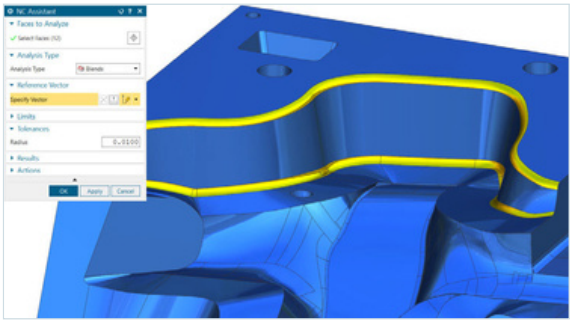

You can examine draft, blends, corners and levels by using the NC Assistant.

Master model concept

NX leverages the master model concept to facilitate concurrent design and NC programming by linking all functions, such as CAM and CMM, back to the single model definition of the part.

As a result, the NC programmer can start programming a part before the designer is finished. Full associativity ensures subsequent updates of NC operations as the design model changes.

Modeling, assemblies and drafting

NX provides one of the most powerful sets of CAD functions available on the market today. These functions are packaged with NX CAM for the NC programmer who needs to model parts, stock shapes, fixtures or machine tools for simulation.

Expandable solution for the manufacturing engineer

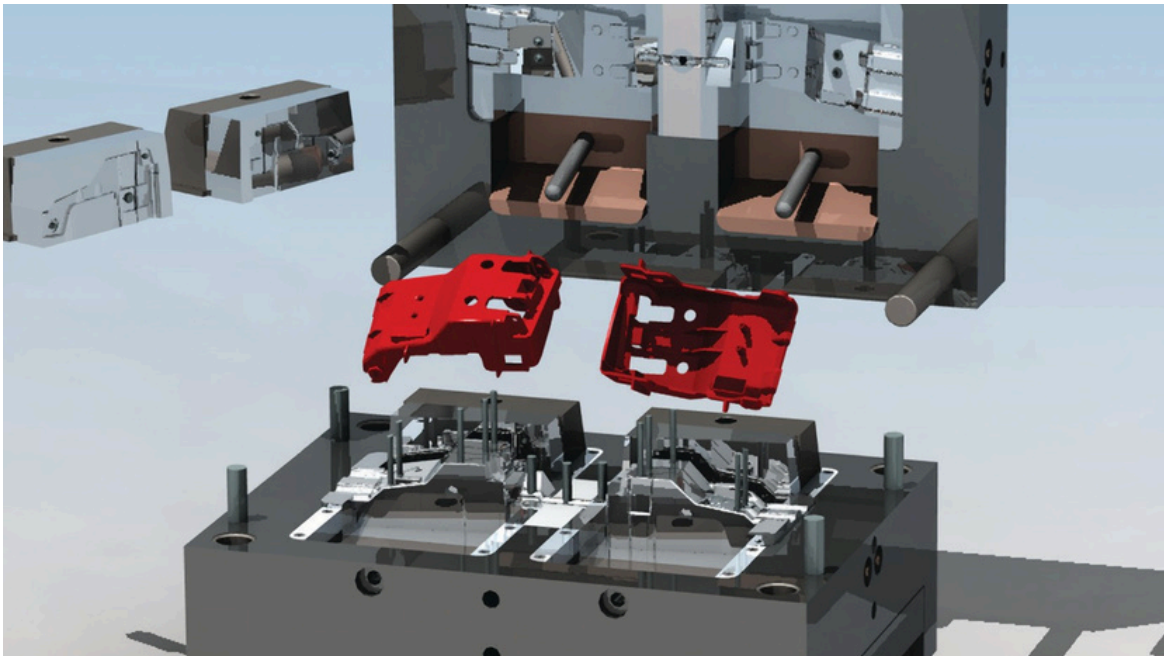

NX for manufacturing

NX also provides a wide range of additional manufacturing applications such as tool design and inspection programming.

Tool design

NX Mold Design automates the entire process of designing the parting line and surfaces, core and cavity, and mold base directly from the part model. Key feature data is added to drive automated tool path programming in NX CAM.

NX Progressive Die Design includes expert die-making knowledge to automate the design process. This guides you through a series of steps for formability analysis, strip layout, die base design and validation.

NX provides a solution for automotive stamping dies that includes planning, die face design and feasibility, structure design and validation.

NX Electrode Design incorporates numerous industry best practices into a step-by-step approach that automates the design, under-sizing, validation and documentation of electrodes.

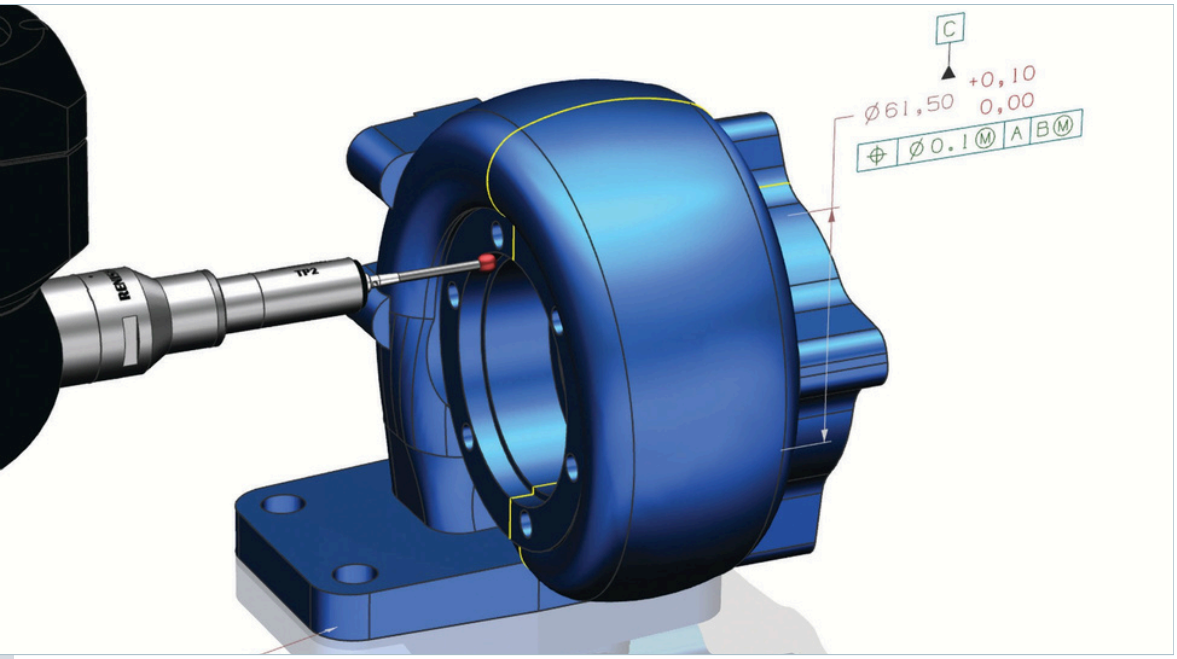

Automated inspection programming

NX CMM Inspection Programming helps you automate the programming of coordinate measuring machines (CMMs).

The streamlined workflows enable faster creation of collision-free inspection programs. You can reduce nonconformance and ensure accuracy to design requirements by programming directly on the CAD model.

You can automatically generate the latest inspections operations using product and manufacturing information (PMI) on the model, including GD&T and 3D annotation.
To further automate the programming process, you can apply your own standard inspection path methods, tools and project templates.
NX offers CMM machine simulation for kinematic model-based simulations of the machine to verify that all features are reachable and to validate that machine limits are not exceeded.

Additive manufacturing

NX helps you industrialize additive manufacturing and create a new generation of products. You can design, simulate, prepare, print and validate prototype or production parts on a wide range of 3D printing equipment.
With NX, you can manufacture parts using various 3D printing technologies, including planar powder bed, multi-axis and hybrid print technologies.

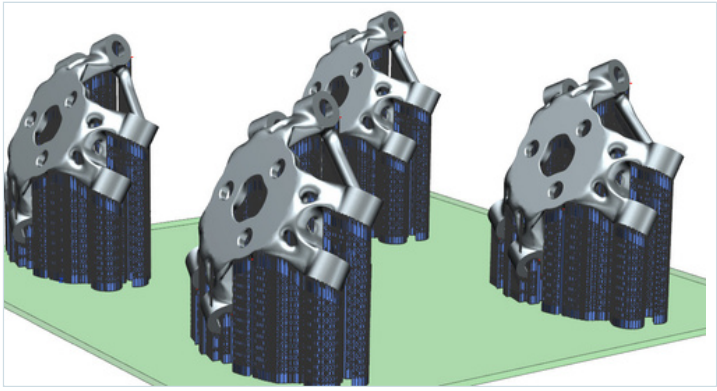

NX's advanced 3D printing preparation tools assist with placing, orienting, and supporting parts in the build tray in the most efficient manner possible.

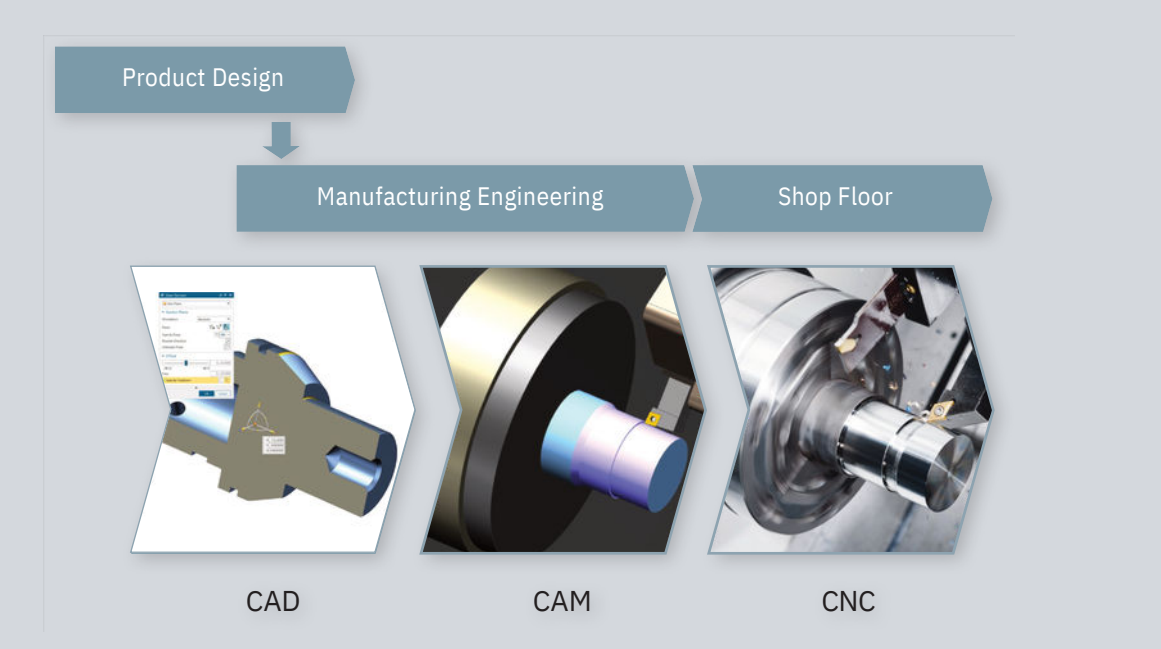

CAD-CAM-CNC process chain

To maximize the value of a machine tool, you need to optimize the process that drives it. A tightly connected overall process leads to faster deployment of a new machine and greater production efficiency.

CAD

The manufacturing process starts with input from the part design data – usually a 3D CAD model, but in some instances from a 2D drawing.

3D CAD software often is needed to prepare or adjust the part design model to make it ready for NC programming.

CAD applications can also be used to design and assemble fixtures. NX CAM packages are available with fully integrated CAD functions – all in the same NX system.

CAM

NX CAM includes NC programming, postprocessing and machine tool simulation. In an optimized process chain each of these CAM elements is configured to match the target machine tools.

A complete package

Siemens is an established leader in advanced machine tool controller technology and drive equipment.

This combination of software and manufac- turing equipment expertise enables us to support a CAD-CAM-CNC process chain that maximizes the value of your latest machine tool investments.

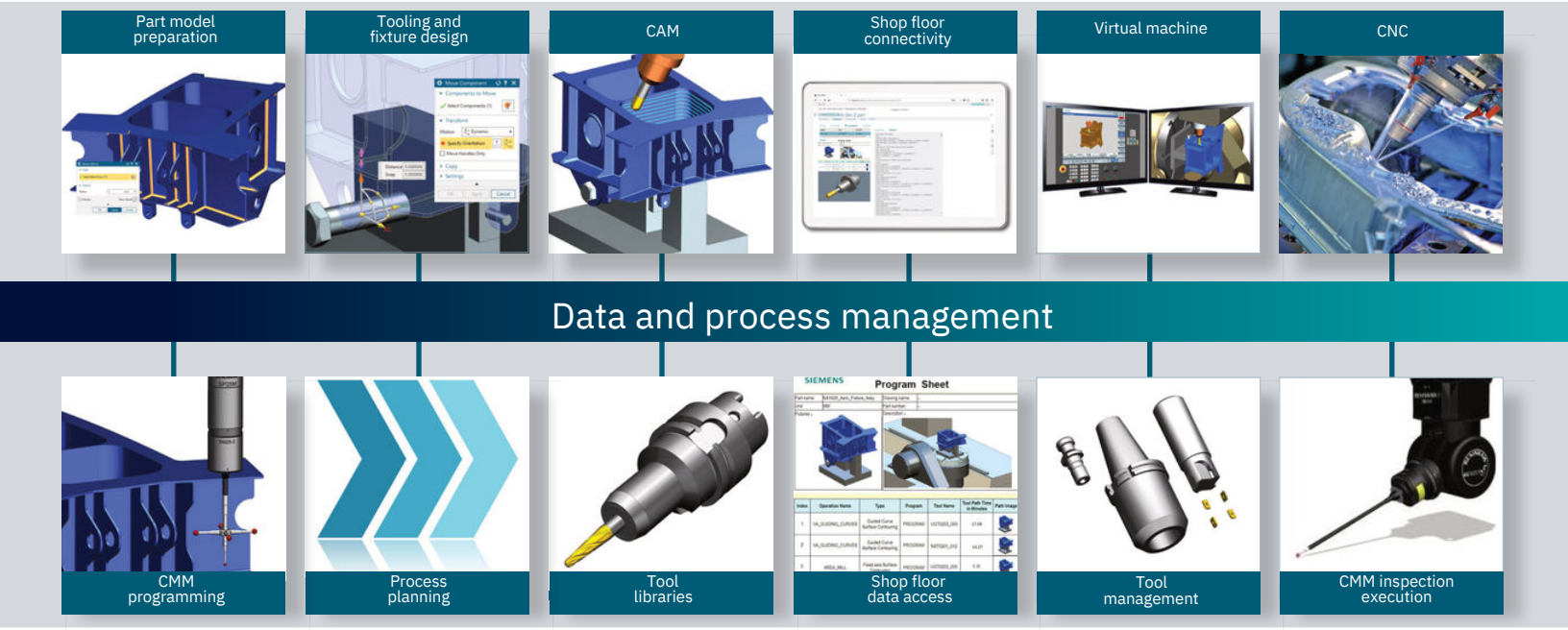

Digital machine shop

The CAD-CAM-CNC process chain supports the core machining solution. Many companies need additional applications and other equipment to complete their part manufacturing process.

A solution to match your needs

Being able to use the same 3D model in multiple applications, such as tool design or CMM programming, is a major advantage. NX can support these initiatives by enabling all of these applications to share the same 3D model technology for a faster, more integrated process.

Data and process management

Siemens Digital Industries Software facilitates data and process management through Teamcenter software, which you can leverage to manage a complete manufacturing plan.

Shop floor applications are available, including distributed numerical control (DNC), to connect Teamcenter-managed data directly to machine tools. Shop floor tool data management solutions can use plan data and interfaces to equipment such as tool presetters.

Digital machine shop

As you define a manufacturing plan and take it to the shop floor for execution, Siemens can support you with the digital machine shop – our end-to-end integrated software solution for part manufacturing.

NX CAM – a full range of capability

NX CAM offers a wide range of in-depth NC programming capabilities that allows the NC programmer to address many tasks using one system.

2.5-axis milling	This module facilitates simple milling and drilling that's used on almost every job. Zig-zag, offset and plunge milling are examples of the tool paths provided. Methods can range from manual tool positioning to advanced trochoidal roughing. Any of the milling modules can be combined with the turning module for mill-turn support.
3-axis milling	Roughing, rest milling, semi-finishing and contoured surface finishing address the challenges of freeform surfaces. This capability includes additional functions needed for high-speed machining.
5-axis milling	Flexible 5-axis programming functions are available with highly automated geometry selection and precise tool axis control.
Turbomachinery milling	Specialized 5-axis NC programming operations are supported for complex multi-bladed rotational parts, such as blisks and impellers.
Tube machining	Specialized 5-axis NC programming operations to machine complex inner surfaces, such as those found in combustion engine intake manifolds and cylinder heads.
Turning	This module provides simple 2-axis turning as well as multi-spindle, multi-turret applications. The system can work with solids or wireframe or even 2D profiles. For mill-turn machines, this module can be combined with any of the milling modules as needed.
Wire EDM	Automated 2- to 4-axis programming is supported, including collar machining, no-core pocketing and multi-pass profiling with direct access to machine tool technology databases.
FBM Author	These capabilities enable you to create and modify feature definitions and rules-driven automation processes through our Machining Knowledge Editor.
NC simulation	Fully integrated, G-code-driven machining simulation uses postprocessed output for the most complete simulation. Simultaneous multi-channel motion is synchronized and analyzed. The included Machine Tool Builder constructs realistic, kinematic machine assemblies.
Advanced CAD for NC programming	The latest NX CAD technology is provided to facilitate fast 3D model preparation and editing. This NC programming capability can be used to create 3D models of stock shapes, machine tool assemblies, tools and fixtures. The level of the CAD functionality depends on the selected CAM package.

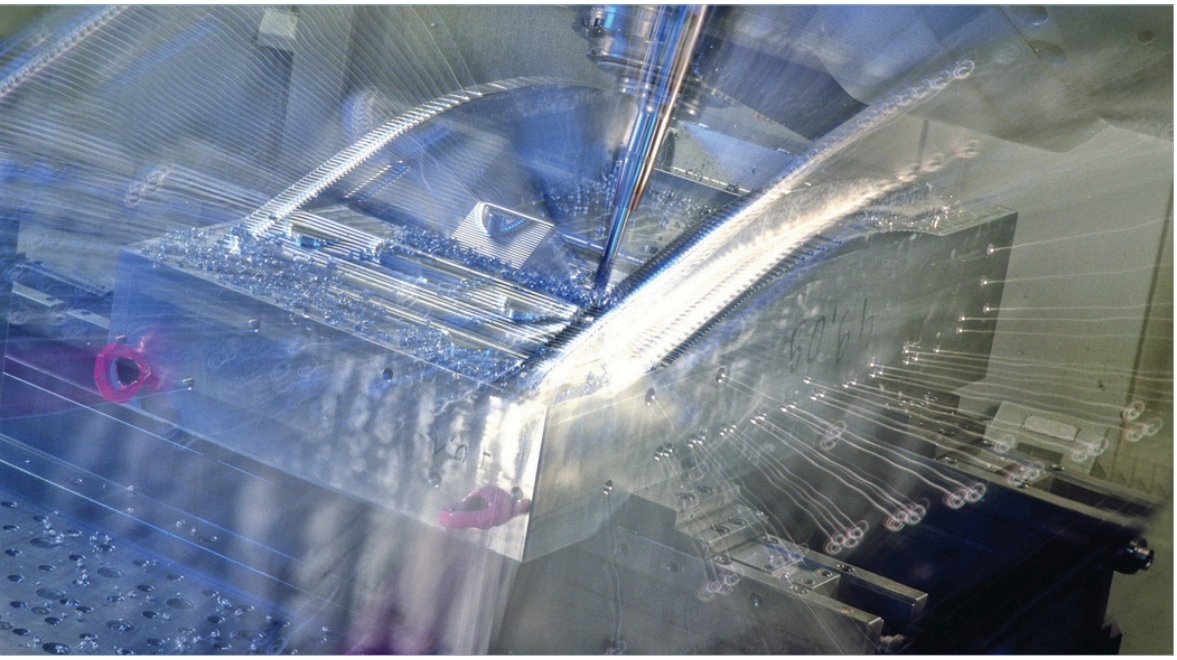

Maximize the value of your software investment

NX CAM modules and packages

Software modules	NX CAM packages				
	CAD/CAM Turning Foundation	CAD/CAM Milling Foundation	CAM-only 5-Axis Machining	Advanced 5-Axis Machining	Total Machining
Foundation	•	•	•	•	•
2.5-Axis Milling		•	•	•	•
3-Axis Milling		•	•	•	•
5-Axis Milling			•	•	•
Turbomachinery Milling				•	
Turning	•				•
Feature Based Machining Author					•
NC Simulation			•	•	•
Advanced CAD for NC programming*	•	•		•	•

* The Foundation module includes a range of CAD editing functions. The Advanced CAD for NC programming functions (level 1 or level 2) are included in the NX CAM packages as shown above. Each of the other CAM modules is available as a separate add-on.